NY Automation Wire Cutters

Categories: A-Automation Systems, Automation Cutters · **Brand:** Vessel



Description

Horizontal body, sliding type, short and compact.
Ideal for cutting castings (the blade is closer to the product).
No slack when sliding
Pull and push types–6 different models available
Adjustable sliding stroke
Cutting of castings when mounted on a casting-cutting device, spindle plate, etc.
Cutting or handling with a robot when mounted on
a machine.
NY units are mounted on a slide with an adjustable stroke of 0-3 mm.
Available with both retract and advance travel.

Capacity (mm)				Dimensions (mm)							
Soft plastic	Hard plastic	Copper	Steel	A	B	C	D	E	F	G	H
3.0	2.0	1.6	1.0	8.6	75.9	40.9	25	15	23	47.6	4

(segue)

Capacity (mm)								Air consumption, cm³/stroke
Soft plastic	I	J	K	L	M	N	O	
3.0	M4	3	22	1.6	8.5	6.25	16.5	48

Brand

© SIRA S.p.A. 2026 All Rights Reserved.
Via della Resistenza, 53 20090 Buccinasco (MI) - Italia | C.F./P. IVA 01870750161 - CCIAA BG 243678

VESSEL

Vessel

Founded in May 1916, Vessel is one of the leading manufacturers of professional tools, with a longstanding commitment to quality, innovation, value for money, and customer satisfaction.

The company places particular emphasis on environmental sustainability through the development of durable products, the use of recycled materials, resource-recovery-oriented design, and the minimization of its environmental impact. Over the course of more than a century, a commitment to quality has become the brand's hallmark: "VESSEL – Mark of Quality."

Galleria

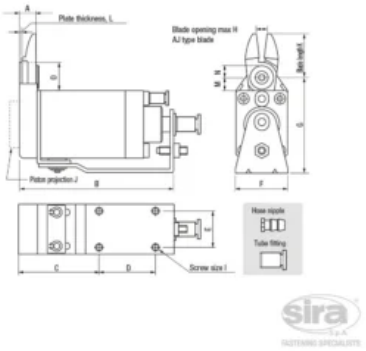

© SIRA S.p.A. 2026 All Rights Reserved.