# Fixed torque transducer

**Categories:** M-Hand Tools, Metrology · **Brand:** Crane Electronics



## Description

**Fixed transducers are used at control stations or next to assembly lines. When used with joint simulators–which replicate actual production conditions–they enable effective offline monitoring to verify the performance of a tool used in assembly operations**
**. Without simulators, they can be used to test ratchet torque wrenches**
**. They support Plug&Play operation with Crane torque meters**
**Can be mounted on customizable mobile stations**
**An IS (Industry Standard) version is available if the user wishes to connect the transducer to a different reading system (bridge imbalance measurement).**

PHYSICAL MEASUREMENTS Torque measurement in both directions of rotation (calibrated clockwise unless otherwise specified)
TRANSDUCER PLUG&PLAY DATA The UTA system indicators read the following information from the UTA chip embedded in the transducer: torque range, serial number, expiration date, calibration, bridge resistance value, mV/V value

| **CALIBRATION** | **Supplied with**<br>**a calibration certificate with references to National Standards and International Standards** |
|---|---|
| | UKAS (UK Accreditation<br>Service) calibration, in accordance with BS 7882 |
| CONSTRUCTION | Patented metal ring mechanism<br>that eliminates signal loss due to contact bounce and<br>ensures low rotational friction in both directions (<0.1% of the<br>rated torque or 0.1 Nm, whichever is greater) |
| | The verified service life is over 1<br>billion rotations without any noticeable degradation in<br>electrical performance or wear |

© SIRA S.p.A. 2026 All Rights Reserved.
Via della Resistenza, 53 20090 Buccinasco (MI) - Italia | C.F./P. IVA 01870750161 - CCIAA BG 243678

| CALIBRATION | Supplied with<br>a calibration certificate with references to National Standards and International Standards |
|---|---|
| | Aluminum body / Shaft material<br>: stainless steel |
| | Overload capacity: 125% of the<br>rated torque |
| | Panel mounting per ANSI B<br>107-4/1982; BS4006/1982; DIN3121/1987 |
| | Male panel connector with a<br>plug and a retaining clip that can be removed if necessary |
| | Female panel connector supplied with<br>a retaining clip that can be removed if necessary |
| | Female hexagonal fitting with ball<br>and retaining spring |
| CONNECTORS | According to BS9522 - F0017, Type 14-19S<br>, MIL-C-26482 |
| ZERO STABILITY | < ⍰0.1% FS/°C |
| STATIC ACCURACY | ⍰0.25% FS |
| OPERATING ENVIRONMENT | Temperature: 5-40°C / Humidity:<br>10-75% non-condensing / Protection rating: IP40 |

## Brand

### Crane Electronics

Founded in 1971, Crane Electronics develops solutions for torque management and torque control, meeting the manufacturing industry's needs for quality, safety, traceability, and productivity in the automotive, aerospace, construction, and marine sectors.

The product line includes torque wrenches, rotary and static torque transducers, data loggers, testers, and software, offering a comprehensive suite of tools for tool verification and process control.

## Galleria

© SIRA S.p.A. 2026 All Rights Reserved.

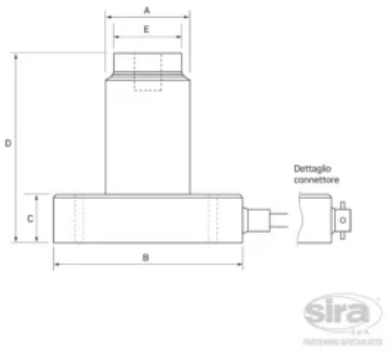


© SIRA S.p.A. 2026 All Rights Reserved.