Fixed torque transducer

Categories: M-Hand Tools, Metrology · **Brand:** Crane Electronics



Description

Fixed transducers are used at control stations or next to assembly lines. When used with joint simulators–which replicate actual production conditions–they enable effective offline monitoring to verify the performance of a tool used in assembly operations
. Without simulators, they can be used to test ratchet torque wrenches
. They support Plug&Play operation with Crane torque meters
Can be mounted on customizable mobile stations
An IS (Industry Standard) version is available if the user wishes to connect the transducer to a different reading system (bridge imbalance measurement).

PHYSICAL MEASUREMENTS Torque measurement in both directions of rotation (calibrated clockwise unless otherwise specified)
PLUG&PLAY DATA FOR THE TRANSDUCER The UTA system indicators read the following information from the UTA chip embedded in the transducer: torque range, serial number, expiration date, calibration, bridge resistance value, mV/V value

CALIBRATION	**Supplied with** **a calibration certificate with references to National Standards and International Standards**
	UKAS (UK Accreditation Service) calibration, in accordance with BS 7882
CONSTRUCTION	Patented metal ring mechanism that eliminates signal loss due to contact bounce and allows for low rotational friction in both directions (<0.1% of the rated torque or 0.1 Nm, whichever is greater)
	The verified service life is over 1 billion rotations without any noticeable degradation in electrical performance or wear

© SIRA S.p.A. 2026 All Rights Reserved.
Via della Resistenza, 53 20090 Buccinasco (MI) - Italia | C.F./P. IVA 01870750161 - CCIAA BG 243678

CALIBRATION	Supplied with a calibration certificate with references to National Standards and International Standards
	Aluminum body / Shaft material : stainless steel
	Overload capacity: 125% of the rated torque
	Panel mounting per ANSI B 107-4/1982; BS4006/1982; DIN3121/1987
	Male panel connector with a plug and a retaining clip that can be removed if necessary
	Female panel connector supplied with a retaining clip that can be removed if necessary
	Female hexagonal fitting with ball and retaining spring
CONNECTORS	According to BS9522 - F0017, Type 14-19S , MIL-C-26482
ZERO STABILITY	< ⍰0.1% FS/°C
STATIC ACCURACY	⍰0.25% FS
OPERATING ENVIRONMENT	Temperature: 5-40°C / Humidity: 10-75% non-condensing / Protection rating: IP40

Brand

Crane Electronics

Founded in 1971, Crane Electronics develops solutions for torque management and torque control, meeting the manufacturing industry's needs for quality, safety, traceability, and productivity in the automotive, aerospace, construction, and marine sectors.

The product line includes torque wrenches, rotary and static torque transducers, data loggers, testers, and software, offering a comprehensive suite of tools for tool verification and process control.

Galleria

© SIRA S.p.A. 2026 All Rights Reserved.

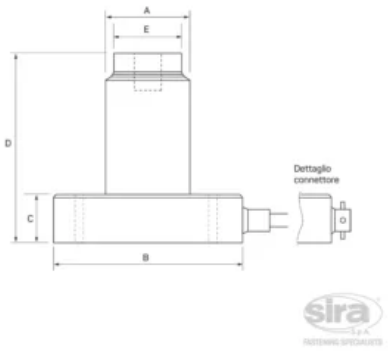

© SIRA S.p.A. 2026 All Rights Reserved.