MD Reversible Drill Bits

Categories: M-Hand Tools, Removal, Deformation, and Cutting · **Brand:** AIRMARTIN



Description

Reversible
Spindle included

Brand

AIRMARTIN

Choosing an AIRMARTIN tool means having a product with outstanding qualities, where innovation and technology embody the core principles of research aimed at the continuous improvement of performance, ease of use, and operating conditions for the operator.

Based on the premise that a tool is not merely an aid to work, but a valuable means of enhancing and improving productivity and working conditions, AIRMARTIN tools are designed in accordance with the most advanced principles of ergonomics and operational comfort. Improving your work environment begins with the realization that there is always room for improvement and that you can benefit from making a wise choice when selecting professional tools.

AIRMARTIN strikes a balance between science, technology, and user needs through a positive, dynamic vision and an appealing competitive positioning, guided by one essential principle: human well-being within the environment.

Galleria

© SIRA S.p.A. 2026 All Rights Reserved.

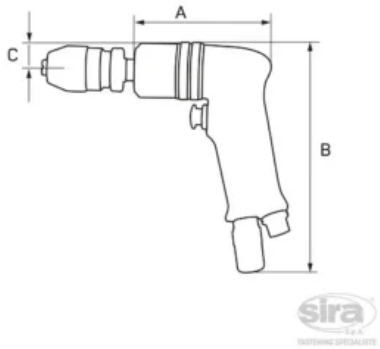

© SIRA S.p.A. 2026 All Rights Reserved.
Via della Resistenza, 53 20090 Buccinasco (MI) - Italia | C.F./P. IVA 01870750161 - CCIAA BG 243678